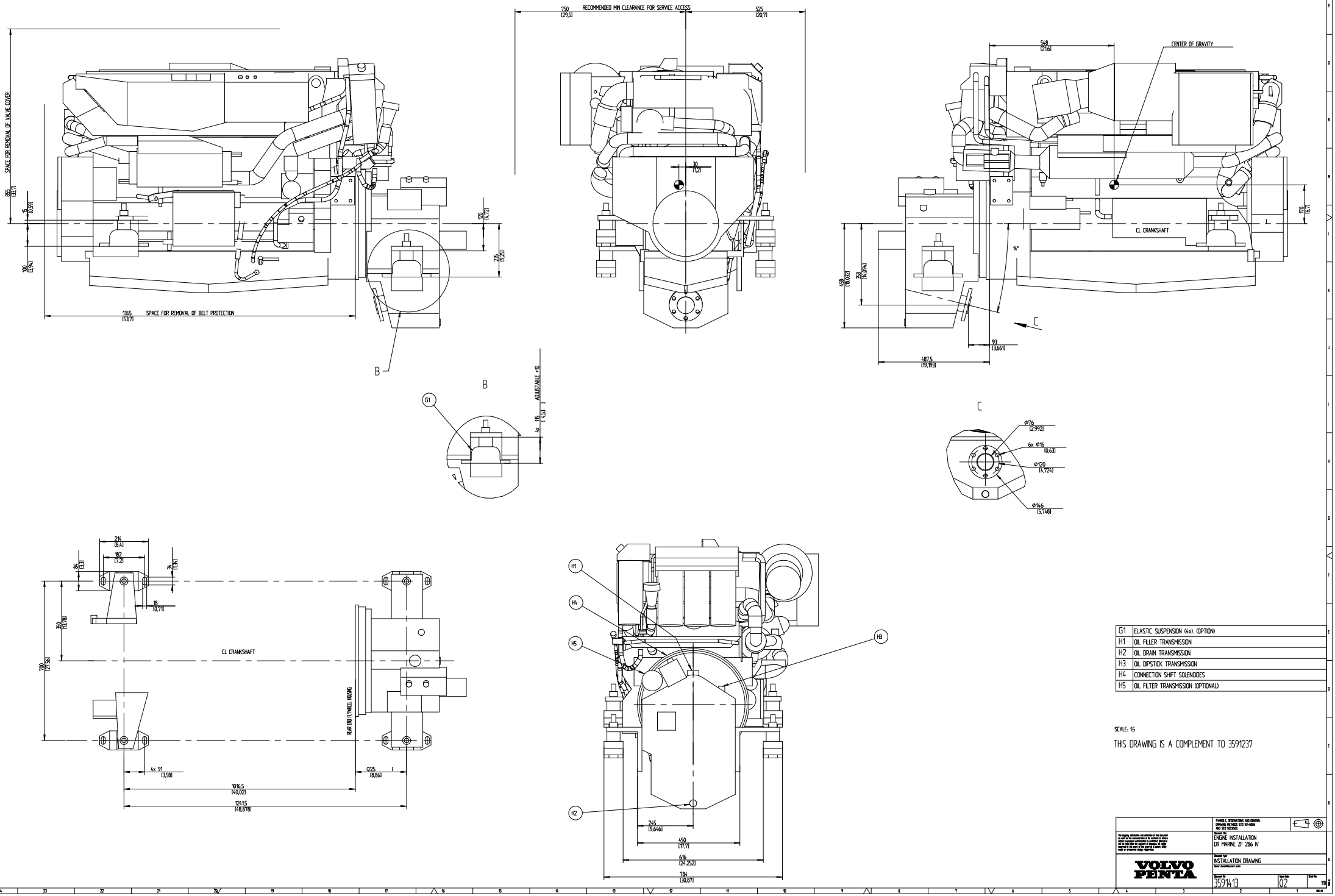

G1	ELASTIC SUSPENSION (4x). (OPTION)
H1	OIL FILLER TRANSMISSION
H2	OIL DRAIN TRANSMISSION
H3	OIL DIPSTICK TRANSMISSION
H4	CONNECTION SHIFT SOLENOIDES
H5	OIL FILTER TRANSMISSION (OPTIONAL)

SCALE: 1:5

THIS DRAWING IS A COMPLEMENT TO 3591237

SYMBOLS, DESIGNATIONS AND GENERAL DRAWING METHODS SEE 101-0005 AND 2313 5023500

Document title: ENGINE INSTALLATION D9 MARINE ZF 286 IV

Document type: INSTALLATION DRAWING

Sheet size: 1:5

Document No: 3591413

Issue Index: 02

Sheet No: 1(1)

VOLVO PENTA

3591413-02 - Загружено с www.volvopenta.com 26.06.2014 7:48:03