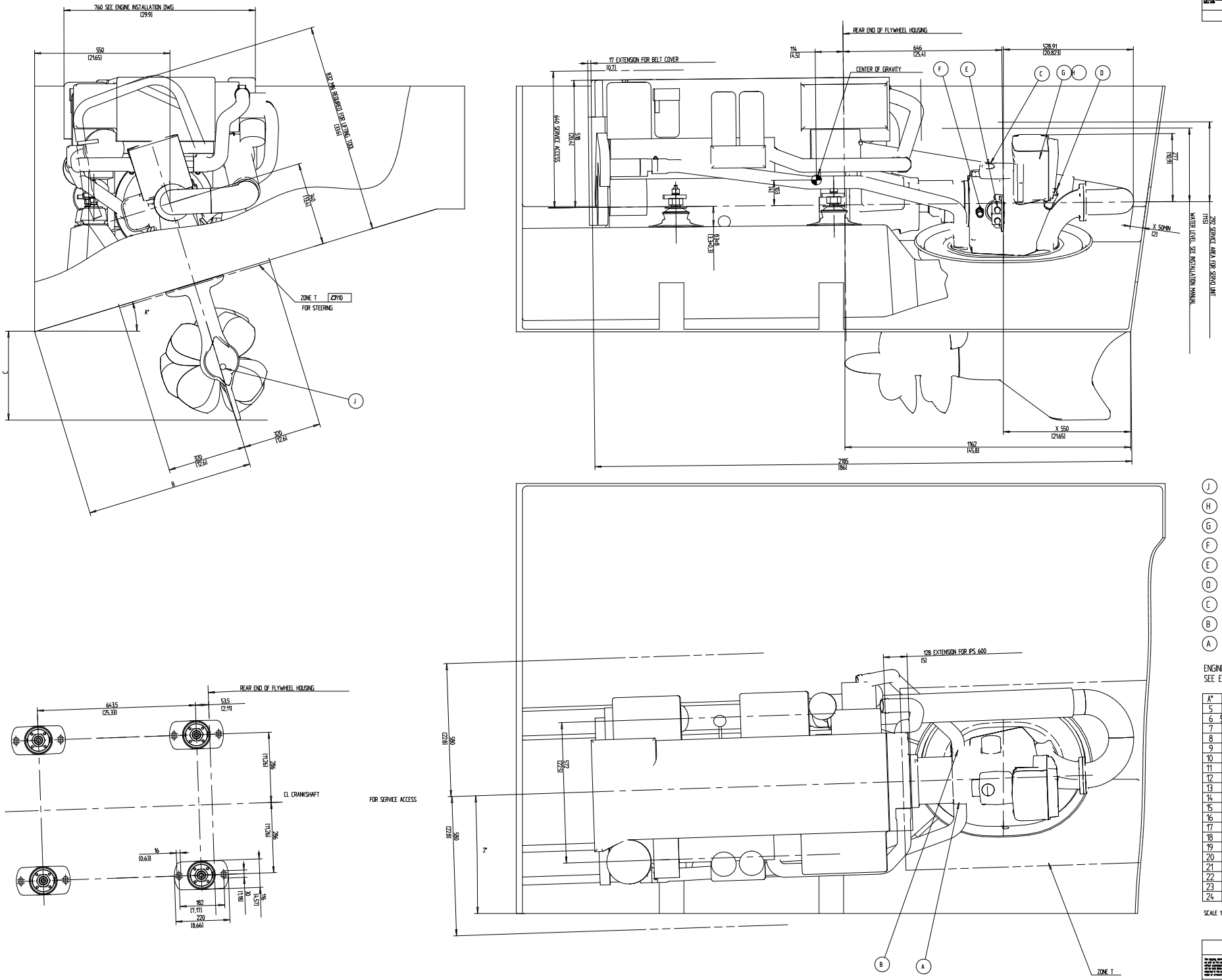

J OIL DRAIN

H CONNECTION ELECTRICAL CONTROL

G CONNECTION BATTERI POS. AND NEG,

F CONNECTION OIL TEMP./PRESSURE

E CONNECTION, SHIFT SOLENOIDES

D OIL DIPSTICK GEAR BOX

C OIL FILLER GEAR BOX

B SEA WATER OUTLET, HOSE I.D. 50mm

A SEA WATER INLET, HOSE I.D 50 mm

ENGINE RELATED ITEMS
SEE ENGINE INSTALLATION DRAWINGS

A°	B	C
5	582	532
6	589	521
7	596	508
8	603	496
9	611	483
10	618	469
11	626	455
12	635	441
13	643	426
14	652	410
15	661	395
16	670	378
17	679	362
18	689	344
19	699	326
20	709	308
21	720	289
22	731	270
23	742	250
24	753	229

SCALE 1:5

SYMBOLS, DESIGNATIONS AND GENERAL DRAWING METHODS STD 101-0005		
Document title: INSTALLATION DRAWING IPS WITH D6		
Document type: INSTALLATION DRAWING		
Drawn by: 21422519	Sheet index: 01	Sheet No: 1(1)

VOLVO PENTA

21422519-01 - Загружено с www.volvopenta.com 26.06.2014 6:06:10