3591233-03 - Загружено с www.volvopenta.com 26.06.2014 7:08:41

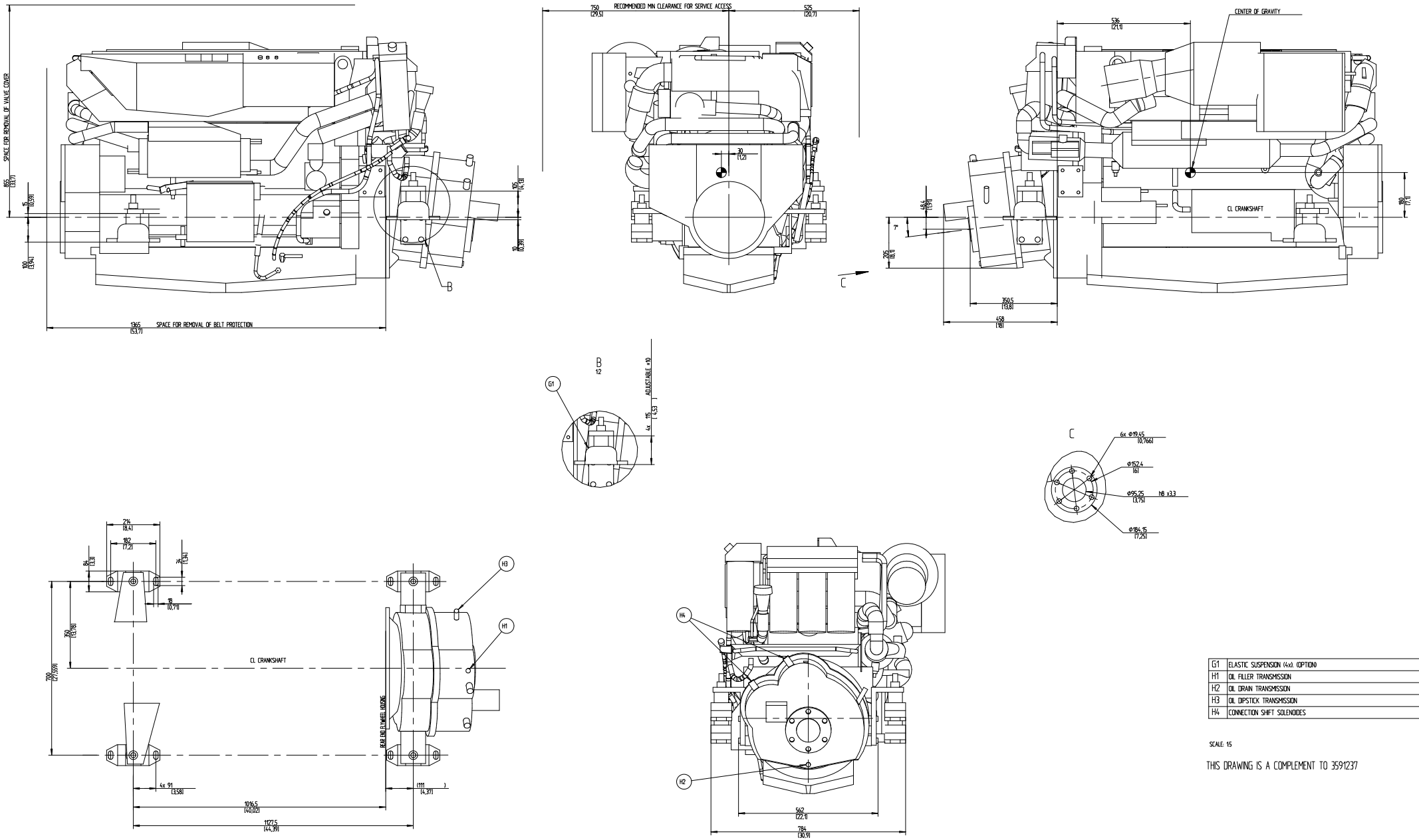

G1	ELASTIC SUSPENSION (4x). (OPTION)
H1	OIL FILLER TRANSMISSION
H2	OIL DRAIN TRANSMISSION
H3	OIL DIPSTICK TRANSMISSION
H4	CONNECTION SHIFT SOLENOIDES

SCALE: 15

THIS DRAWING IS A COMPLEMENT TO 3591237

SYMBOLS, DESIGNATIONS AND GENERAL DRAWING METHODS STD 101-0005 AND STD 5023500

Document title: ENGINE INSTALLATION D9 MARINE MG 5075 A

Document type: INSTALLATION DRAWING

Sheet size: 3591233 | Sheet no: 03 | Sheet No: 1(1)

VOLVO PENTA