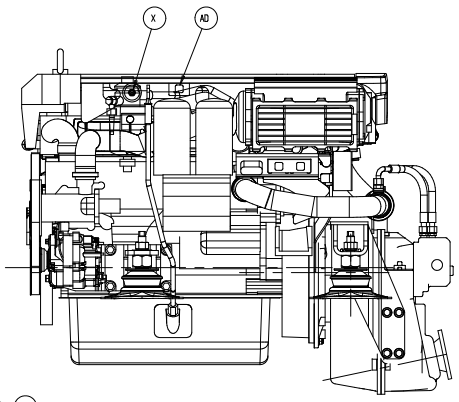

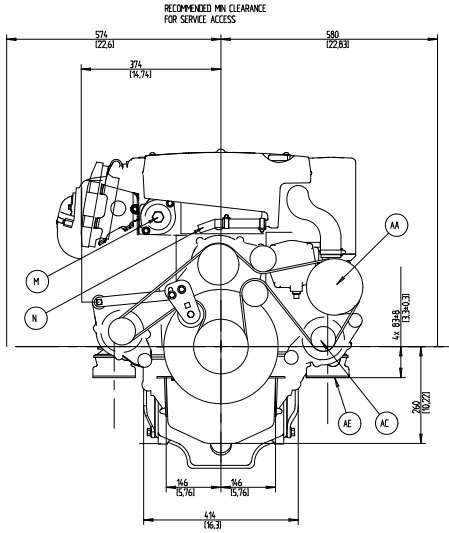

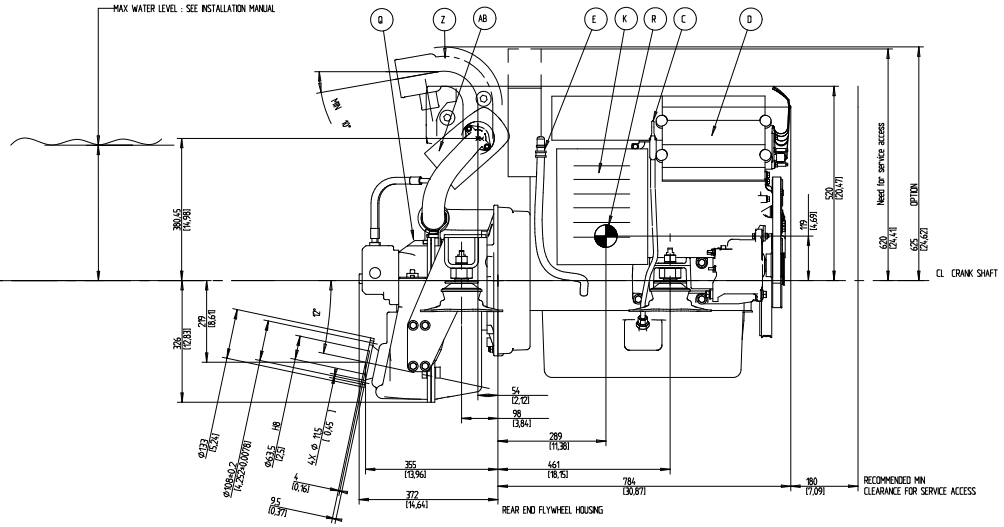

- (A) WATER FILLER CAP, FRESH WATER
- (B) OIL FILLER CAP, ENGINE
- (C) OIL DIPSTICK, ENGINE LEFT OR RIGHT SIDE MOUNTED
- (D) ENGINE CONTROL UNIT
- (E) OIL DRAIN (WITH PUMP), ENGINE Φ12,5
- (F) OIL FILTER MAIN
- (G) OIL FILTER BYPASS
- (H) LIFTING EYE
- (I) WATER DRAIN, FRESH WATER
- (J) WATER DRAIN, SEA WATER
- (K) AIR FILTER
- (L) FUEL FILTER
- (M) HOT WATER OUTLET
- (N) HOT WATER INLET
- (P) SEA WATER INLET Φ38
- (Q) OIL DIPSTICK REVERSE GEAR
- (R) CENTRE OF GRAVITY
- (T) OIL FILTER AND OIL SUCTION REVERSE GEAR
- (U) FUEL INLET CONNECTION
- (V) FUEL RETURN TO TANK
- (X) ENGINE STOP
- (Y) CRANKCASE VENTILATION
- (Z) EXHAUST RISER Φ 102 (4") (OPTION)
- (AA) SEA WATER PUMP
- (AB) EXHAUST ELBOW Φ102 (4")
- (AC) EXTRA ALTERNATOR
- (AD) DIAGNOSE CONNECTOR
- (AE) ELASTIC SUSPENSION (4x)

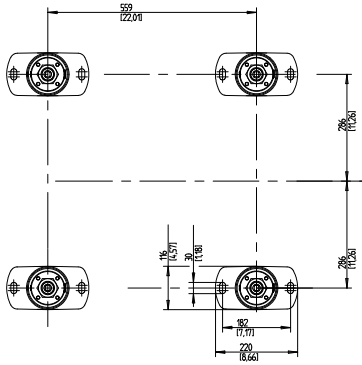

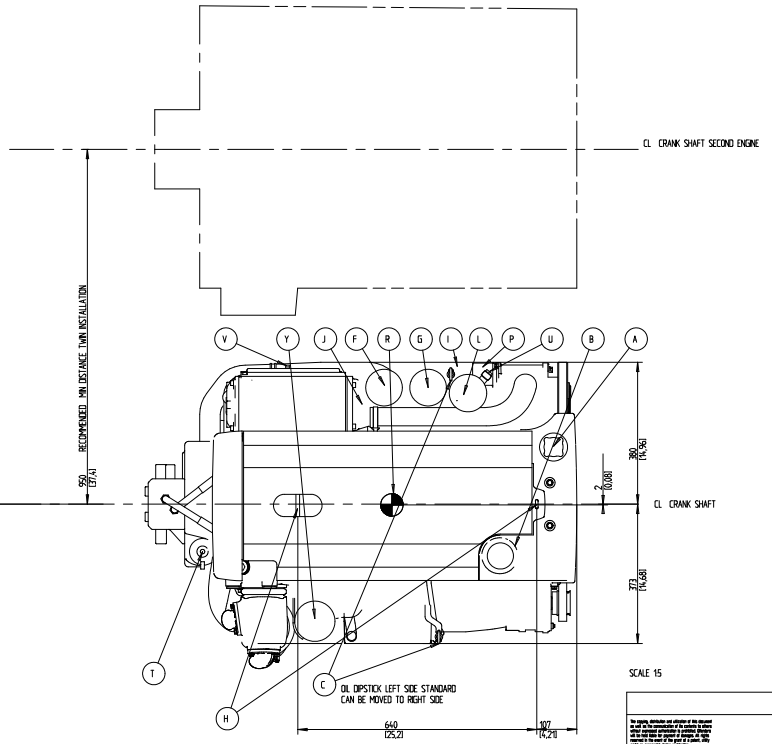

SCALE 15

Engineering Release Date 2006	Location
D-96005-07	Change description / Change Reason / Where Defined
	SEE ECN
P/A	. . . .
	D . 2 . 6 . main
Document status status	RELEASED
Date	09-04-14
Modification count	

SYMBOLS, DESIGNATIONS AND GENERAL DRAWING METHODS SIS 161-0003
ISO STD 5020/6/8

The copying, distribution and utilization of this document as well as the communication of its contents to others without express authorization is prohibited. Offenders are liable to the payment of damages. All rights are reserved in the event of the grant of a patent, utility model or ornamental design registration.

VOLVO PENTA

Document title: ENGINE DIMENSIONS D4 196G3VE

Document type: DIMENSION DRAWING

Owner manufacturer parts

Document No: 3591860 | Issue index: 02 | Sheet No: 1/1

3591860-02 - Загружено с www.volvopenta.com 26.06.2014 7:00:27