Engineering Release Date/Time	Location	Change description	P/A: D. 4 . 8 . main	Document release status: RELEASED
D-14005-07		SEE ECN		Date: 09-04-14

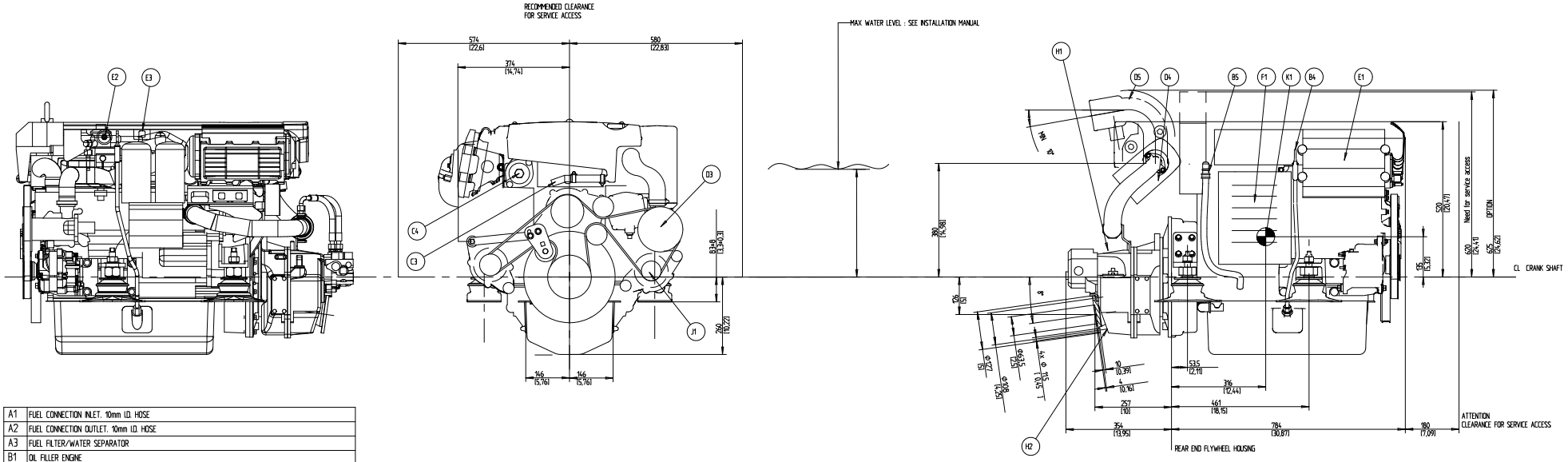

A1	FUEL CONNECTION INLET. 10mm I.D. HOSE
A2	FUEL CONNECTION OUTLET. 10mm I.D. HOSE
A3	FUEL FILTER/WATER SEPARATOR
B1	OIL FILLER ENGINE
B2	OIL FILTER, MAIN
B3	OIL FILTER, BYPASS
B4	OIL DIPSTICK ENGINE PORT STANDARD, CAN BE MOVED TO STARBOARD
B5	OUTLET FOR OIL BILGE PUMP. 12mm/1/2" I.D. HOSE.
B6	CRANK CASE VENTILATION FILTER
C1	FRESH WATER FILLER
C2	FRESH WATER DRAIN POINT
C3	CONNECTION HOT WATER INLET R 1/2" (OPTION)
C4	CONNECTION HOT WATER OUTLET R 1/2" (OPTION)
D1	SEA WATER INLET FOR Φ38 /1,5" I.D. HOSE.
D2	SEA WATER DRAIN POINT (2x)
D3	SEA WATER PUMP
D4	WET EXHAUST CONNECTION. 102 mm / 4" I.D. HOSE
D5	EXHAUST RISER (OPTION)
E1	ECU CONTROL UNIT
E2	ENGINE STOP
E3	DIAGNOSE CONNECTOR
F1	AIR FILTER
G1	ELASTIC SUSPENSION (4x)
G2	LIFTING EYE, FRONT, Φ40
G3	LIFTING EYE, REAR, Φ30
H1	OIL DIP STICK TRANSMISSION
H2	OIL DRAIN TRANSMISSION
J1	POWER STEERING PUMP ALT. EXTRA ALTERNATOR (OPTION)
K1	CENTRE OF GRAVITY

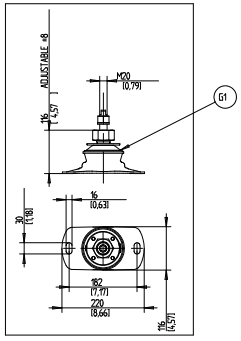

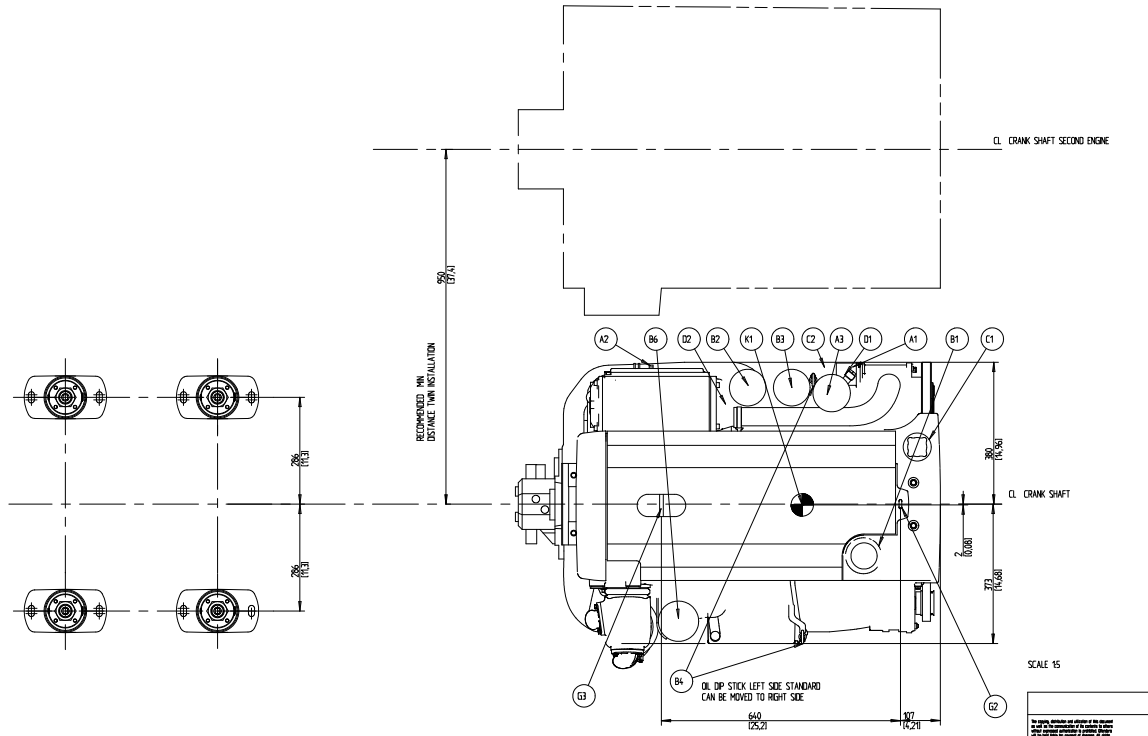

SCALE 1:5

21105525-03 - Загружено с www.volvopenta.com 26.06.2014 6:59:20

The copyright, distribution and utilization of this document as well as the communication of its contents to others without express permission is prohibited. Offenders will be held liable for payment of damages. All rights reserved in the event of the grant of a patent, utility model or ornamental design registration.

VOLVO PENTA

SYMBOLS, DESIGNATIONS AND GENERAL DRAWING METHODS SIZE 10/1-0005 AND SIZE 5023/5028

Document title: ENGINE DIMENSIONS D4 HS45AE

Document type: DIMENSION DRAWING

Sheet size: 21105525 | Sheet no: 03 | Sheet No: 11