3848107-01 - Загружено с www.volvopenta.com 26.06.2014 6:53:03

Engineering Release Notice (ERN)	Location	Change description A=Added M=Mod D=Deleted	P/A	Document release status
			1 . 3 . main D 1 . 5 . main	Date / Modification count

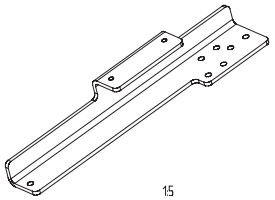

1:5

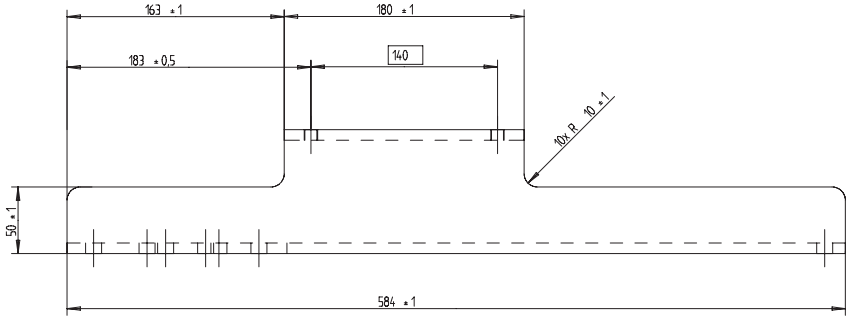

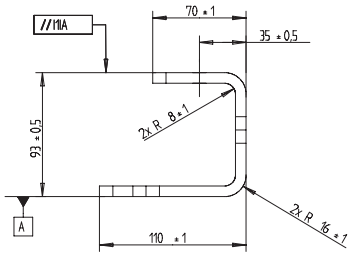

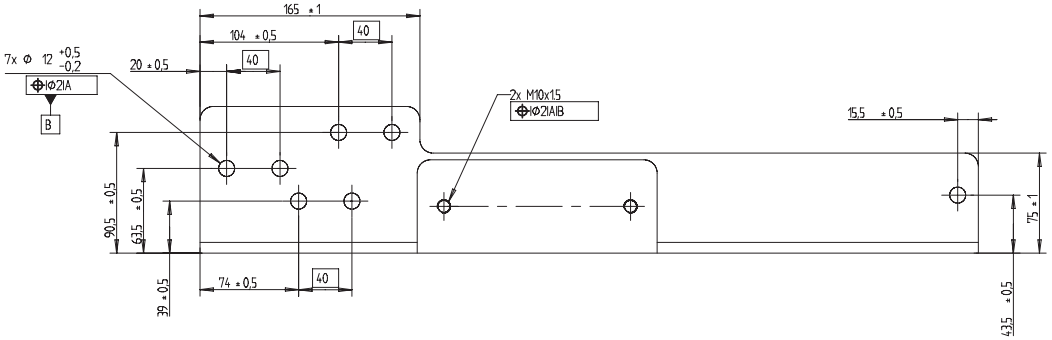

MOUNTING DEVICE
6 SCREW M8x30
6 WASHER 8.4x16x1.5
4 SCREW M10x25
6 WASHER 10.5x26x2
2 SCREW M10x100
8 WASHER 12x30x3
2 SPACER SLEEVE 11x30x3

SCALE 1:2

FREE FROM BURRS STD 102-0005

MATERIAL THICKNESS T = 8±0.4

RH PART SHOWN ON DRAWING
LH PART MIRROR PART No:3848106

To be used as a guideline only.

SYMBOLS, DESIGNATIONS AND GENERAL DRAWING METHODS STD 101-0005 AND STD 5023503

The copying, distribution and utilization of this document as well as the communication of its contents to others without expressed authorization is prohibited. Offenders will be held liable for payment of damages. All rights reserved in the event of the grant of a patent, utility model or ornamental design registration.

VOLVO PENTA

Document title: BRACKET

Document type

Owner domain/Document prefix

Document No	Issue index	Sheet No
3848107	01	1(1)

SIZE A4